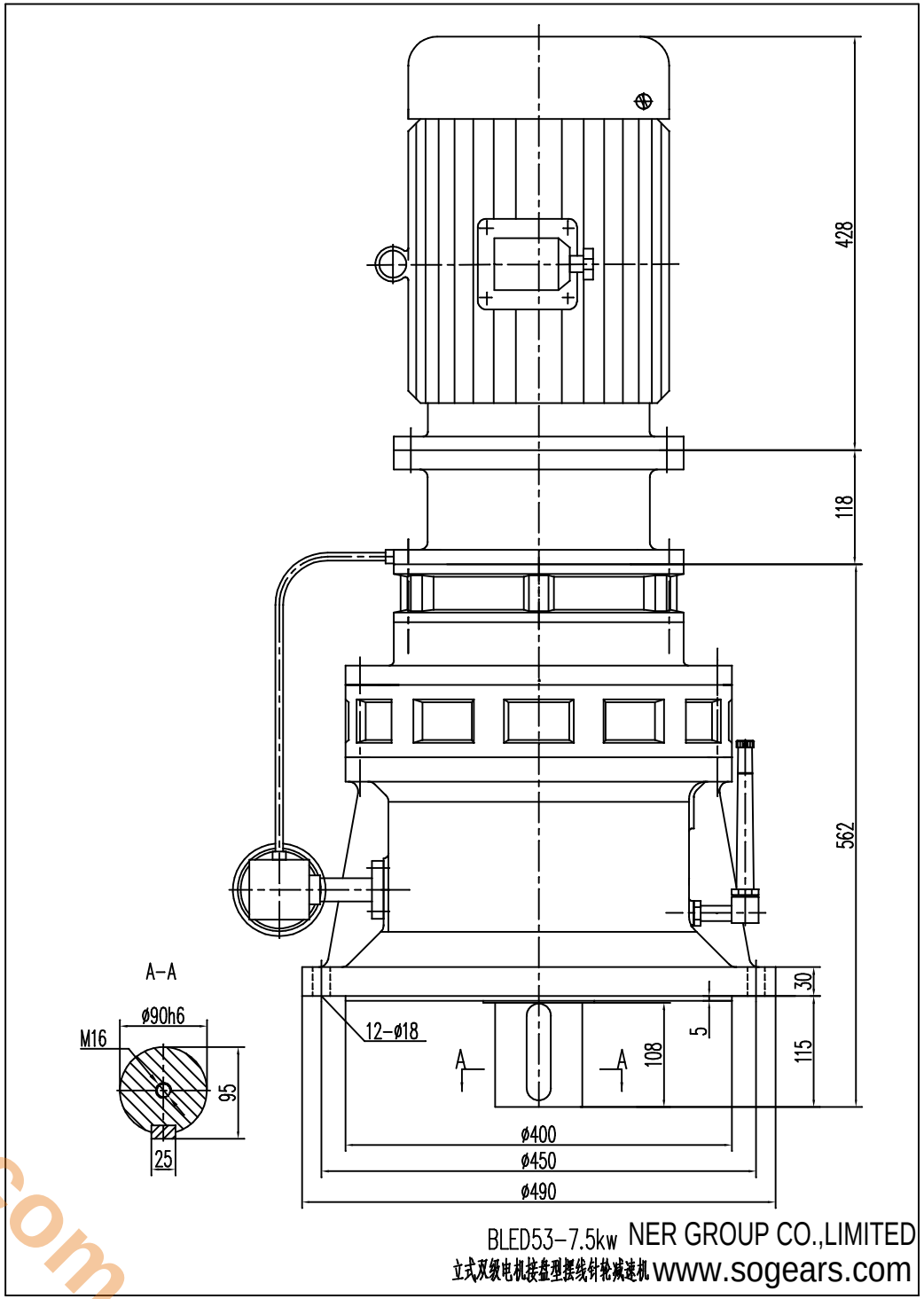

BLED53-7.5kw NER GROUP CO.,LIMITED

立式双级电机接盘型摆线针轮减速机 www.sogears.com

info@sogears.com