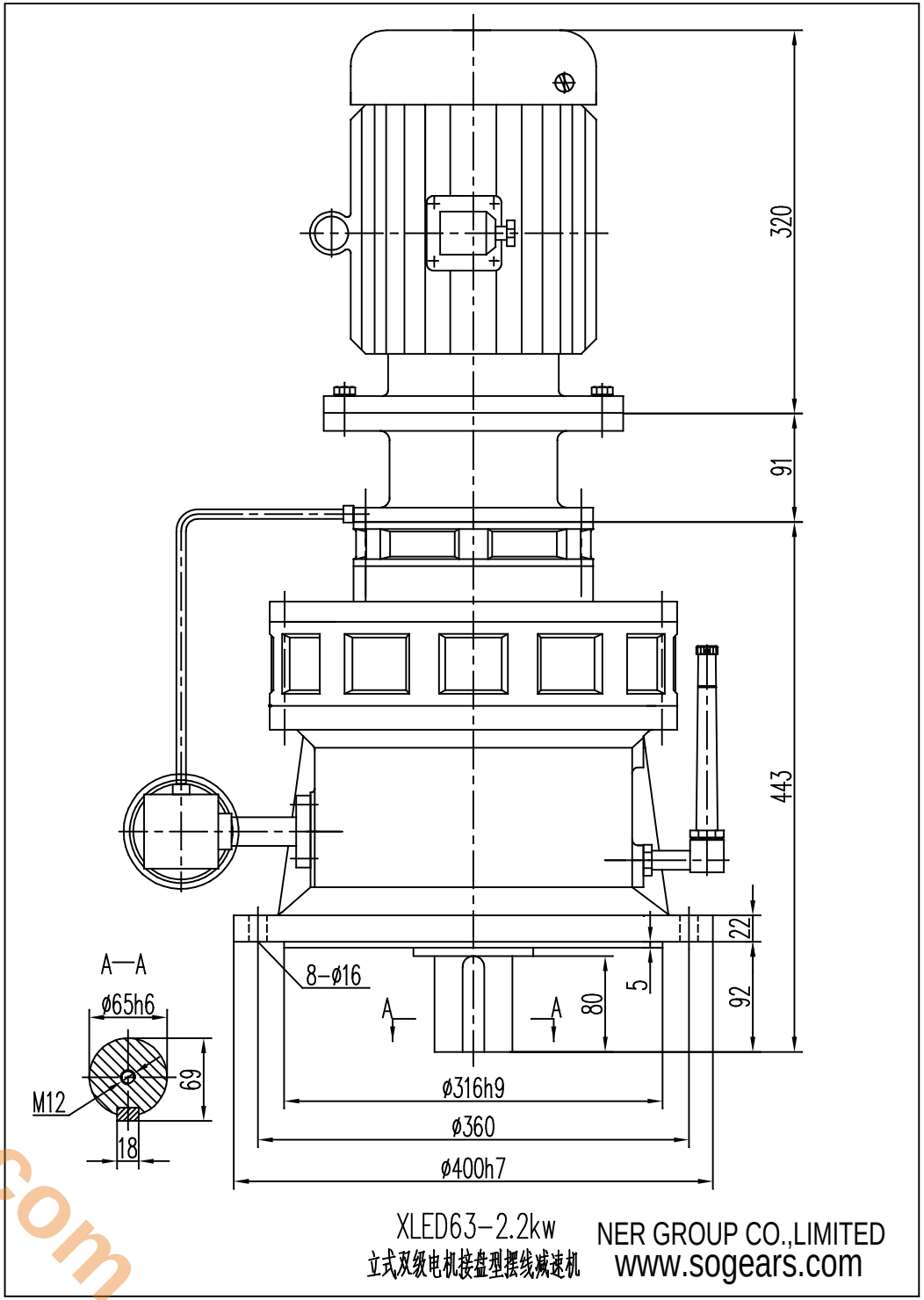

info@sogears.com